RESIDENCE OF
CHRIS & JAMIE MENARD
1351 25th ROAD NE
WAVERLY, KANSAS 66871

LIST OF DRAWINGS

A-100	COVER SHEET
A-101	GENERAL NOTES
A-201	MAIN LEVEL FLOOR PLAN
A-202	LOWER LEVEL PLAN
A-301	ELEVATIONS
A-302	ELEVATIONS
A-401	ROOF PLAN
A-501	SCHEDULES
A-601	WALL DETAILS
A-701	STAIR DETAIL
E-101	MAIN LEVEL ELECTRICAL PLAN
E-102	LOWER LEVEL ELECTRICAL PLAN
S-101	FOUNDATION PLAN
S-102	FOUNDATION DETAILS

CONTACT INFORMATION

CHRIS MENARD
1351 25th ROAD NORTHEAST
WAVERLY, KANSAS KANSAS 66071
785.338.0431

GENERAL NOTES

1. CONTRACTOR SHALL VERIFY ALL CONDITIONS IN THE FIELD PRIOR TO PROCEEDING WITH THE WORK. ANY DESCREPANCIES SHALL BE BROUGHT TO THE ATTENTION OF THE OWNER OR DESIGNER.

2. GENERAL CONSTRUCTION SHALL EQUAL OR EXCEED THE MINIMUM REQUIREMENTS OF THE 2009 INTERNATIONAL BUILDING CODE.

APPLICABLE CODES

IBC 2009 INTERNATIONAL RESIDENTIAL CODE
IECC 2009 INTERNATIONAL ENERGY CONSERVATION CODE
NEC 2008 NATIONAL ELECTRICAL CODE

CODE ANALYSIS

OCCUPANCY	R-3
TYPE OF CONSTRUCTION	V-B
ALLOWABLE AREA UNLIMITED	
ACTUAL AREA	2,903 SF
ALLOWABLE HEIGHT FEET	40
ALLOWABLE STORIES	3
ACTUAL HEIGHT	27 FEET
ACTUAL STORIES	1

VICINITY MAP
NOT TO SCALE

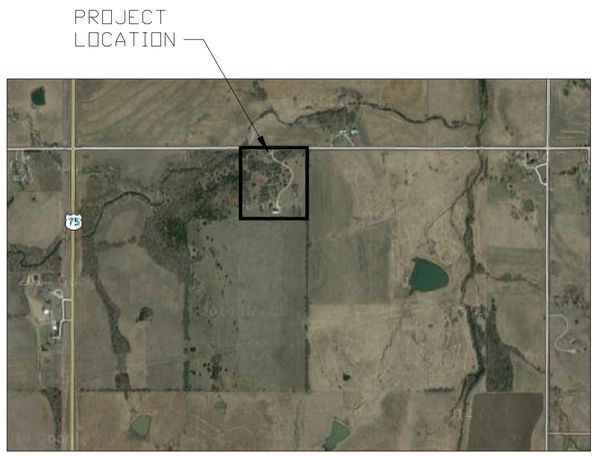

LOCATION MAP
NOT TO SCALE

CONSULTANTS

TECH CAD SERVICES, LLC
Building Designer
Cabinetry Services
Factory Built Consulting

SKILLMAN CONSTRUCTION
NEW STRAWN, KS

OWNER
MENARD RESIDENCE

MARK	DATE	DESCRIPTION

PROJECT NO:	2014.007
DATE:	AUGUST 28, 2014
DRAWN BY:	KHG/SMS
CHK'D BY:	KHG
COPYRIGHT:	

SHEET TITLE

COVER SHEET

A-100

SHEET 1 OF 14

GENERAL:

1. THESE DRAWINGS ARE BASED UPON AVAILABLE INFORMATION. BEFORE EXECUTING ANYTHING HEREIN SHOWN, EXAMINE ACTUAL JOB CONDITIONS. REPORT ANY DISCREPANCY, ERROR, OMISSIONS, OR DIFFICULTY AFFECTING THE WORK TO THE BUILDING DESIGNER FOR REVIEW. COMMENCEMENT OF WORK CONSTITUTES VERIFICATION AND ACCEPTANCE OF EXISTING CONDITIONS.

2. THE BUILDING SYSTEM SHOWN ON THESE DRAWINGS MUST BE ERECTED IN ACCORDANCE WITH THE PLANS AND SPECIFICATIONS USING STANDARD ERECTION PROCEDURES AND ANY MANUFACTURER'S RECOMMENDATIONS.

3. ANY DEVIATIONS FROM THE PLANS (AND SPECIFICATION AS PROVIDED WITHIN THE PLANS) IS SUBJECT TO WRITTEN APPROVAL FROM THE DESIGNER. ANY DEVIATION FROM THE STANDARD ERECTION PROCEDURES AND MANUFACTURER'S RECOMMENDATIONS IS SUBJECT TO THE WRITTEN APPROVAL FROM THE MANUFACTURER.

4. THE CONTRACTOR SHALL OBTAIN ALL NECESSARY PERMITS REQUIRED PRIOR TO CONSTRUCTION.

5. ALL DETAILS AND SECTIONS ARE INTENDED TO BE TYPICAL AND SHALL BE CONSTRUED TO APPLY TO ANY SIMILAR SITUATION ELSEWHERE, EXCEPT WHERE A DIFFERENT DETAIL IS SHOWN.

6. DO NOT SCALE THE DRAWINGS, CALCULATE REQUIRED DIMENSIONS. ALL DIMENSIONS SHOWN ARE TO THE FINISHED FACE OF MATERIAL UNLESS OTHERWISE INDICATED.

7. ANY EXISTING SURFACES DAMAGED DURING CONSTRUCTION SHALL BE REPAIRED PRIOR TO COMPLETION OF WORK.

8. THE CONTRACTOR SHALL FURNISH ALL LABOR, MATERIALS, AND EQUIPMENT NECESSARY TO COMPLETE THE WORK AS SHOWN OR INFERRED BY THE DRAWINGS.

DESIGN:

1. CODES, SPECIFICATION AND STANDARDS (LATEST EDITIONS, U.N.O.)

   ALL CONSTRUCTION SHALL COMPLY WITH THE PROVISIONS OF THE FOLLOWING CODES, SPECIFICATIONS AND STANDARDS, EXCEPT WHERE NOTED TO THE CONTRARY ON THE DRAWINGS AND SPECIFICATIONS OR WHERE MORE STRINGENT REQUIREMENTS ARE SPECIFIED OR SHOWN

   MCIB "SPECIFICATIONS FOR CONCRETE WORK"

2. ALL DESIGN AND CONSTRUCTION SHALL CONFORM TO THE FOLLOWING:

   - 2009 INTERNATIONAL RESIDENTIAL CODE (IRC)
   - 2009 INTERNATIONAL ENERGY CONSERVATION CODE (IECC)
   - 2008 NATIONAL ELECTRICAL CODE (NEC)

DESIGN LOADS:

- DEAD LOAD: ACTUAL MATERIAL WEIGHT
- FLOOR LIVE LOAD: 40 PSF
- ROOF LIVE LOAD: 20 PSF
- ROOF SNOW LOAD: 30 PSF (UN-REDUCED)
- WIND LOADING:
  - WIND SPEED: 100 MPH
  - EXPOSURE: "C"
  - STRUCTURE TYPE: ENCLOSED
  - IMPORTANCE: 1.00
- SEISMIC DESIGN CATEGORY: B

ROUGH CARPENTRY:

1. ALL STRUCTURAL LUMBER SHALL BE S4S #2 SOUTH PINE (SP) (OR BETTER) WITH A MINIMUM MOISTURE CONTENT OF NINETEEN (19) PERCENT.

2. ALL NON-STRUCTURAL LUMBER SHALL BE SPF #2 (OR BETTER).

3. ALL MATERIAL IN CONTACT WITH THE EARTH OR CONCRETE SHALL BE ACQ TREATED OR EQUAL.

4. ALL WOOD STRUCTURAL PANELS SHALL BE IDENTIFIED WITH THE APPRORIATE GRADE TRADEMARK OF THE AMERICAN PLYWOOD ASSOCIATION (APA) AND SHALL MEET THE REQUIREMENTS OF PS-1 OR PS-2, RESPECTIVELY, UNLESS NOTED OTHERWISE ON THE DRAWINGS, WALL PANELS TO BE USED ON THE EXTERIOR SHALL BE COMPATIBLE WITH THE ARCHITECTURAL EXTERIOR FINISH MATERIAL.

5. ALL ENGINEERED WOOD PRODUCTS (LAMINATED VENEER LUMBER (LVL), OR PARALLEL STRAND LUMBER (PSL)) SHALL BE MANUFACTURED TO THE FOLLOWING MINIMUM PROPERTIES:
   - ALLOWABLE BENDING STRESS: 2,950 PSI
   - ALLOWABLE SHEAR STRESS: 285 PSI
   - MODULUS OF ELASTICITY: 1,900,00 PSI

6. ALL BOLTS FOR CONSTRUCTION SHALL BE ASTM A307, GRADE A, OR ASTM A36.

7. ALL NAILS SHALL BE COMMON WIRE NAILS, UNLESS NOTED OTHERWISE ON THE DRAWINGS

8. ALL METAL FRAMING ACCESSORIES ARE STANDARDS OF SIMPSON STRONG-TIE AND ARE TO BE ATTACHED AS PER SIMPSON STRONG-TIE RECOMMENDATIONS.

9. HEADERS, BEAMS AND LINTELS SHALL BE CONSTRUCTED AS PER THE DRAWINGS WITH A MINIMUM OF (2) BEARING STUDS AND (1) FULL HEIGHT STUD AT ALL OPENINGS UNLESS OTHERWISE NOTED ON THE DRAWINGS.

10. STRUCTURAL PANELS SHALL BE PLACED WITH THE FACE GRAIN PERPENDICULAR TO THE SUPPORTING MEMBERS WITH THE END JOINTS STAGGERED FOUR (4) FEET, TYPICALLY.

11. THE QUALITY AND SIZE OF FASTENERS SHALL BE IN ACCORDANCE WITH THE CODE OF RECORD, UNLESS OTHERWISE NOTED ON THE DRAWINGS.

FOUNDATION:

1. ALL FOOTING FOUNDATIONS HAVE A DESIGN ALLOWABLE PRESSURE OF 2,000 PSF.

2. ZONES OF SOIL ENCOUNTERED AT THE BOTTOM OF THE FOOTING EXCAVATIONS DEEMED INDEQUATE SHALL BE REPLACED OR REMEDIATED AS DIRECTED BY THE DESIGNER.

3. MOISTURE CONTENT OF THE SOIL SHALL NOT BE ALLOWED TO CHANGE AFTER EXCAVATION.

4. CONCRETE SHALL NOT BE PLACED ON FROZEN OR SATURATED GROUND.

5. THE BASE OF THE EXCAVATION SHALL BE FREE OF WATER AND LOOSE SOIL PRIOR TO PLACEMENT OF CONCRETE.

6. THE CONTRACTOR SHALL NOTIFY THE DESIGNER OF ANY UNUSAL SOIL CONDITIONS THAT ARE IN VARIANCE WITH THE PLAN DRAWINGS OR WHEN DIFFERENT BEARING MATERIAL IS EVIDENT AND THERE IS A QUESTION OF BEARING CAPACITY.

CONCRETE CONSTRUCTION:

1. CAST-IN-PLACE CONCRETE CONSTRUCTION SHALL CONFORM TO THE LASTEST AMERICAN CONCRETE INSTITUTE DOCUMENTS, ACI-301, 304, 305, 306, 315, 318, AND 347 AND CONCRETE REINFORCING STEEL INSTITUTE MANUAL OF STANDARD PRACTICE UNLESS OTHERWISE NOTED IN THESE CONTRACT DOCUMENTS.

2. CONCRETE FOR FOOTINGS: F'c = 3,000 psi (28 DAY)

3. CONCRETE FOR FLATWORK: F'c = 3,500 psi (28 DAY)

4. REINFORCING STEEL:
   A. ASTM A615 GRADE 40 STEEL
   B. MINIMUM SPLICE LAP = 30 BAR DIAMETERS
   C. HORIZONTAL REINFORCING STEEL SHALL BE CONTINOUS AROUND THE CORNERS AND SHALL MEET THE REQUIREMENTS OF MINIMUM SPLICE LAP.
   D. WELDED WIRE REINFORCEMENT SHALL MEET ASTM A706, GRADE 60.

5. CONCRETE SLUMP SHALL BE A MINIMUM OF 5" +/- (ASTM C-143) AS DELIVERED IN THE FIELD. THE CONTRACTOR MAY USE CHEMICAL ADMIXTURES TO ATTAIN A MAXIMUM SLUMP OF 8" FOR WORKABILITY.

6. AGGREGATE SIZE = ¾" (MAXIMUM)

7. THER SHALL BE NO HORIZONTAL CONSTRUCTION JOINTS IN ANY CONCRETE POURS UNLESS SHOWN ON THE PLANS OR APPROVED IN WRITING BY THE DESIGNER.

8. REINFORCING STEEL COVERAGE SHALL BE IN ACCORDANCE WITH ACI 315 UNLESS NOTED OTHERWISE ON THE DRAWINGS.

9. MINIMUM CLEAR COVERAGE OF CONCRETE OVER REINFORCEING STEEL SHALL NOT BE LESS THAN THE FOLLOWING (UNLESS NOTED OTHERWISE):

   A. CONCRETE PLACED AGAINST TRENCHED EARTH: 3"
   B. CONCRETE PLACED AGAINST FORM IN EARTH: 2"
   C. UN-TIED ELEMENTS (ELEVATED SLABS AND WALLS): 1"
   D. TIED ELEMENTS (COLUMNS AND ELEVATED BEAMS): 1½"

10. FLY ASH MAY BE USED AT A RATE NOT TO EXCEED 15% OF THE TOTAL CEMENT CONTENT.

11. CONCRETE EXPOSED TO WEATHER, PARKED VEHICLES, AND/OR DE-ICING CHEMICAL SHALL CONTAIN 6% (±1%) ENTRAINED AIR BY VOLUME.

12. STIRRUPS AND TIES SHALL COMPLY WITH CONCRETE REINFORCING STEEL INSTITUTE (CRSI) SUPPLEMNTARY REQUIREMENTS FOR IMPROVED BENDABILITY

13. MINIMUM LAP DISTANCE AND HOOK LENGTHS SHALL BE AS FOLLOWS:

BAR	MIN. LAP	90° HOOK
#3	15"	6"
#4	20"	8"
#5	24"	10"
#6	30"	12"
#7	42"	14"
#8	48"	16"
#9	54"	18"

CONSULTANTS

TECH CAD SERVICES, LLC
Building Designer
CAD Drafting Services
Energy Audit Consulting

SKILLMAN CONSTRUCTION
NEW STRAWN, KS

OWNER
MENARD RESIDENCE

MARK	DATE	DESCRIPTION

PROJECT NO: 2014.007
DATE: AUGUST 28, 2014
DRAWN BY: KHG
CHK'D BY: KHG
COPYRIGHT:

SHEET TITLE

GENERAL NOTES

A-101

SHEET 2 OF 14

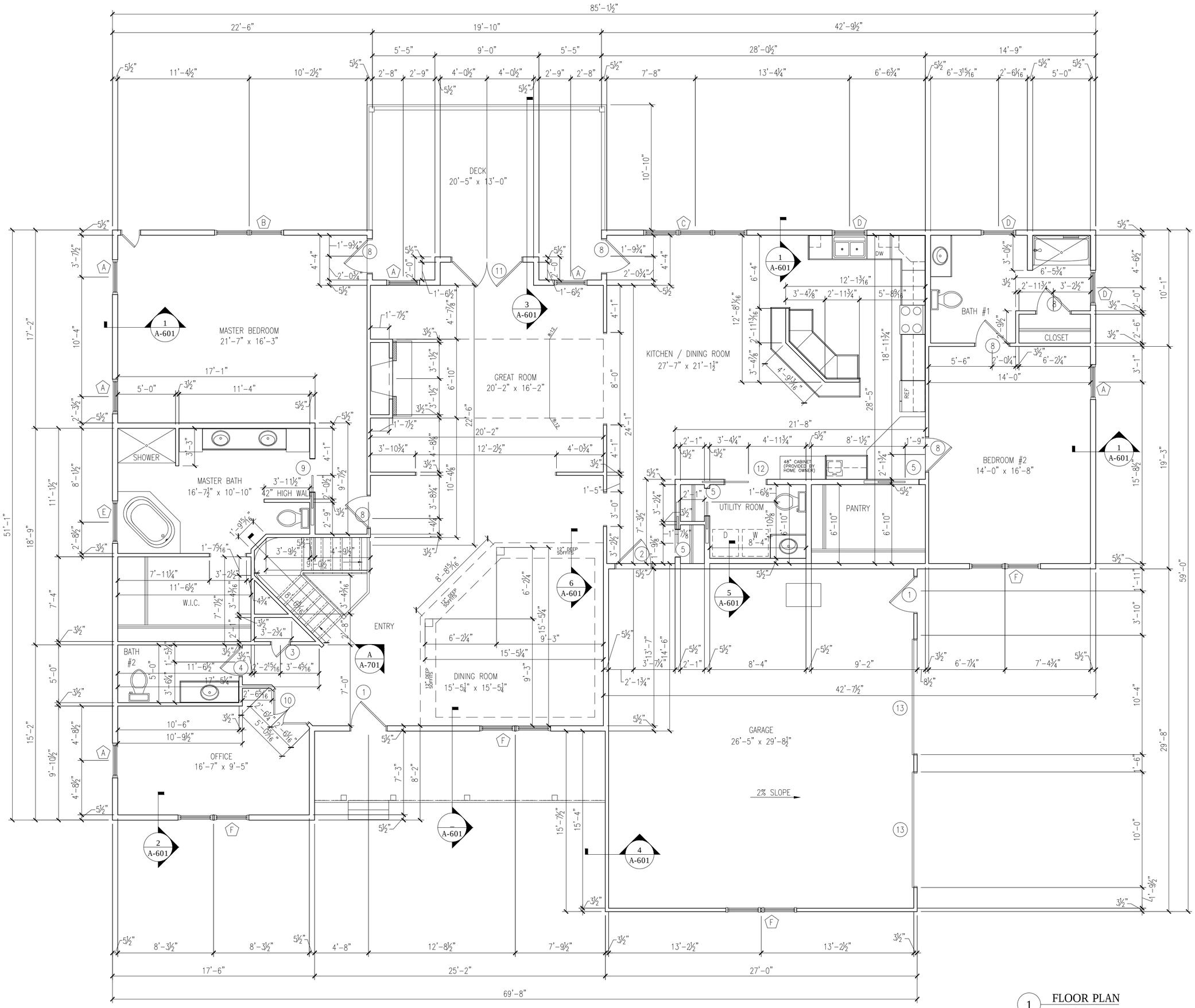

1 FLOOR PLAN
Scale: 3/16" = 1'-0"

CONSULTANTS

TECH CAD SERVICES, LLC
Building Designer
CAD Drafting Services
Energy Audit Consulting

SKILLMAN CONSTRUCTION
NEW STRAWN, KS

OWNER
MENARD RESIDENCE

MARK	DATE	DESCRIPTION

PROJECT NO:	2014.007
DATE:	AUGUST 28, 2014
DRAWN BY:	KHG/SMS
CHK'D BY:	KHG
COPYRIGHT:	

SHEET TITLE

FLOOR PLAN

A-201

SHEET 3 OF 14

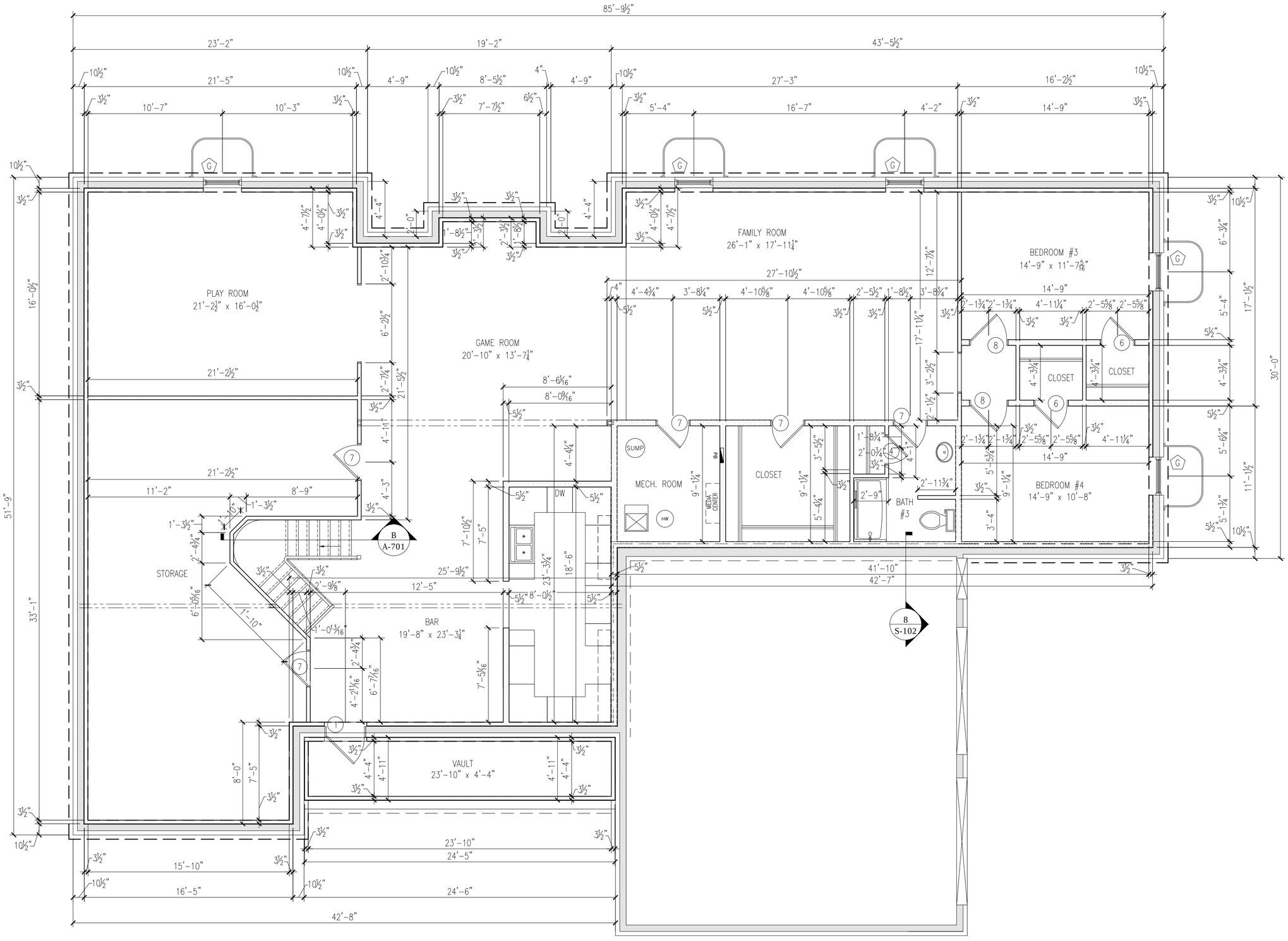

1 LOWER LEVEL PLAN

Scale: 3/16" = 1'-0"

CONSULTANTS

TECH CAD SERVICES, LLC
Building Designer
CAD Drafting Services
Energy Audit Consulting

SKILLMAN
CONSTRUCTION
NEW STRAWN, KS

OWNER
MENARD
RESIDENCE

MARK	DATE	DESCRIPTION

PROJECT NO:	2014.007
DATE:	AUGUST 28, 2014
DRAWN BY:	KHG/SMS
CHK'D BY:	KHG
COPYRIGHT:	

SHEET TITLE

LOWER LEVEL FLOOR PLAN

A-202

SHEET 4 OF 14

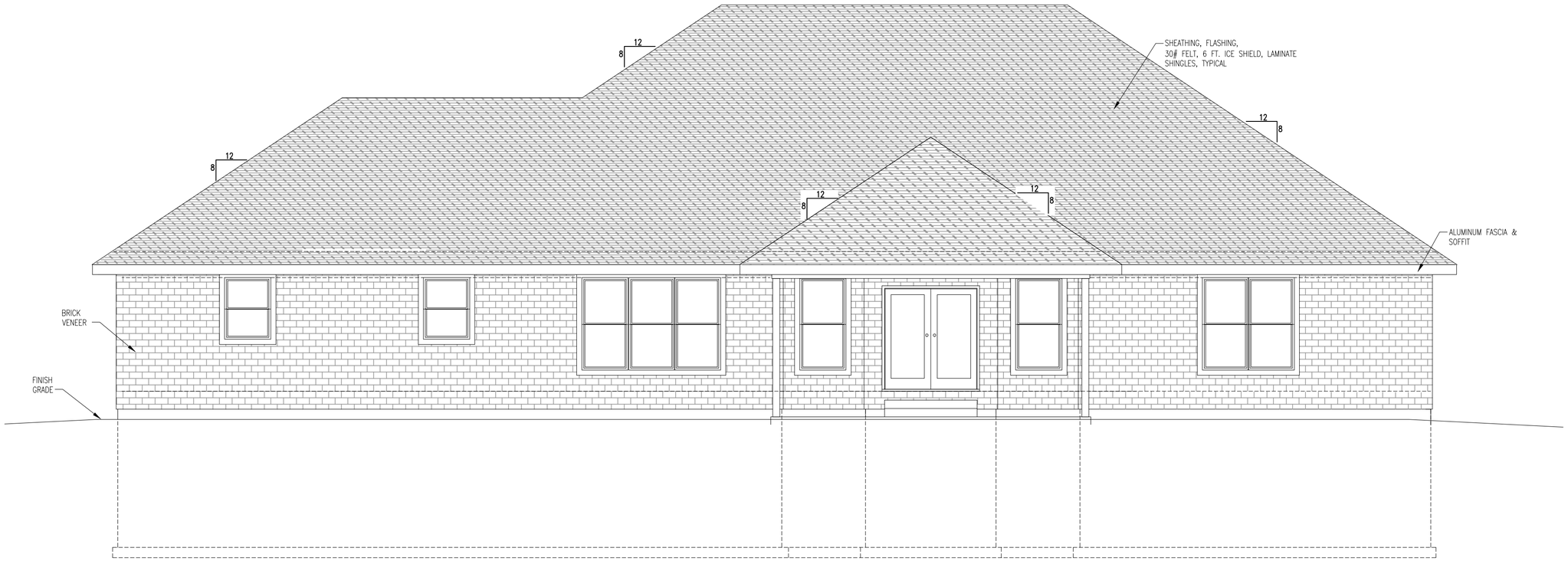

2 REAR ELEVATION

Scale: 3/16" = 1'-0"

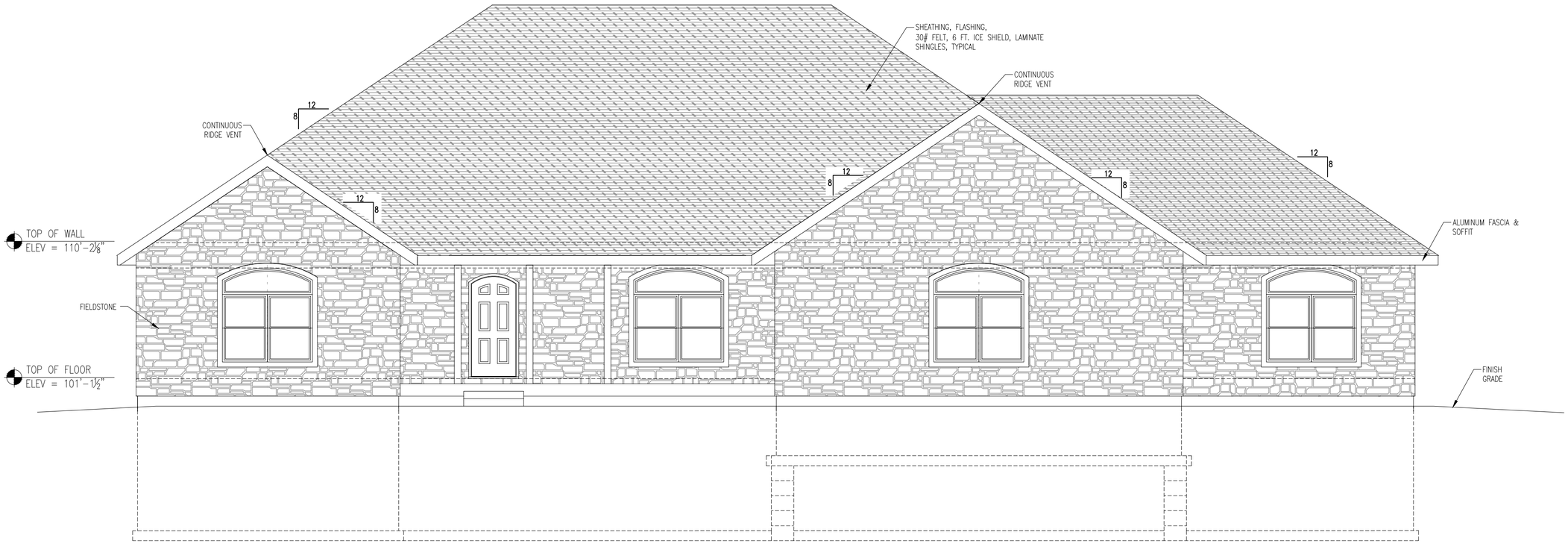

1 FRONT ELEVATION

Scale: 3/16" = 1'-0"

CONSULTANTS

TECH CAD SERVICES, LLC
Building Designer
CAD Drafting Services
Factory Built Consulting

SKILLMAN
CONSTRUCTION
NEW STRAWN, KS

OWNER
MENARD
RESIDENCE

MARK	DATE	DESCRIPTION

PROJECT NO:	2014.007
DATE:	AUGUST 28, 2014
DRAWN BY:	KHG
CHK'D BY:	KHG
COPYRIGHT:	

SHEET TITLE

ELEVATIONS

A-301

SHEET 5 OF 14

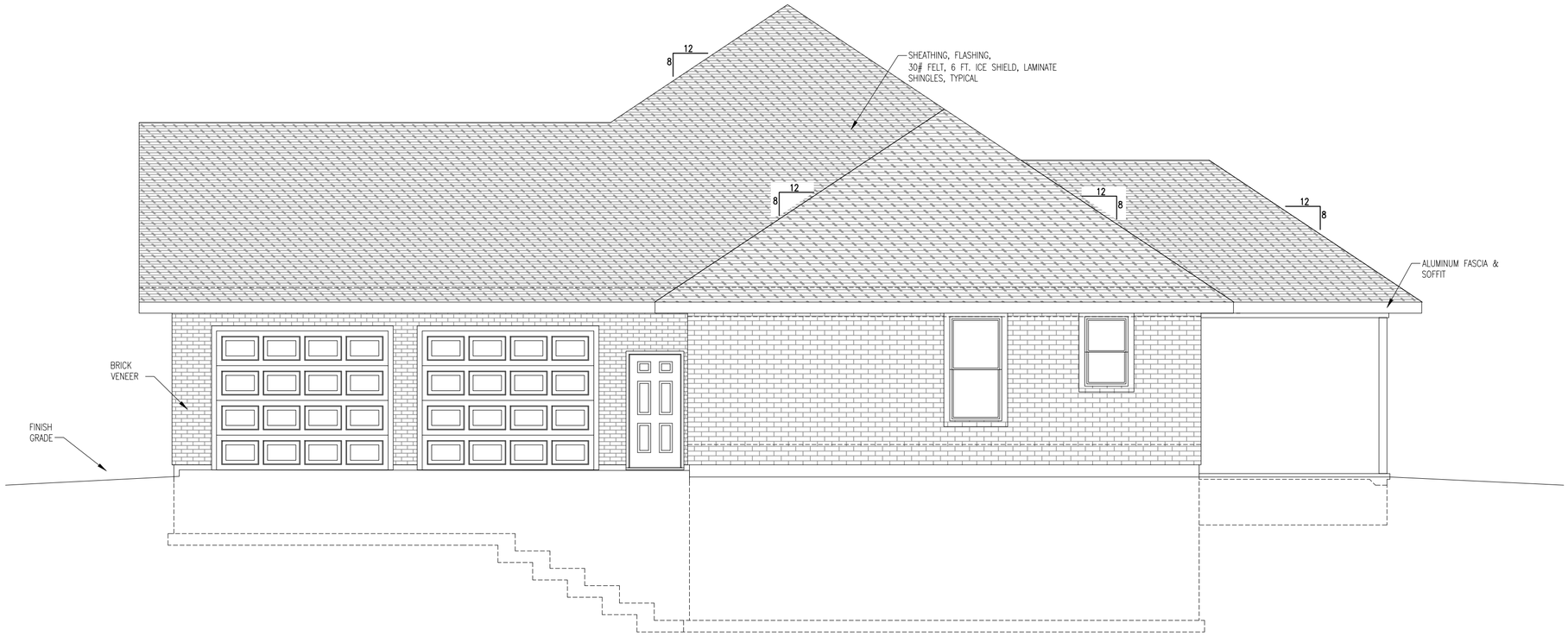

2 RIGHT ELEVATION
Scale: 3/16" = 1'-0"

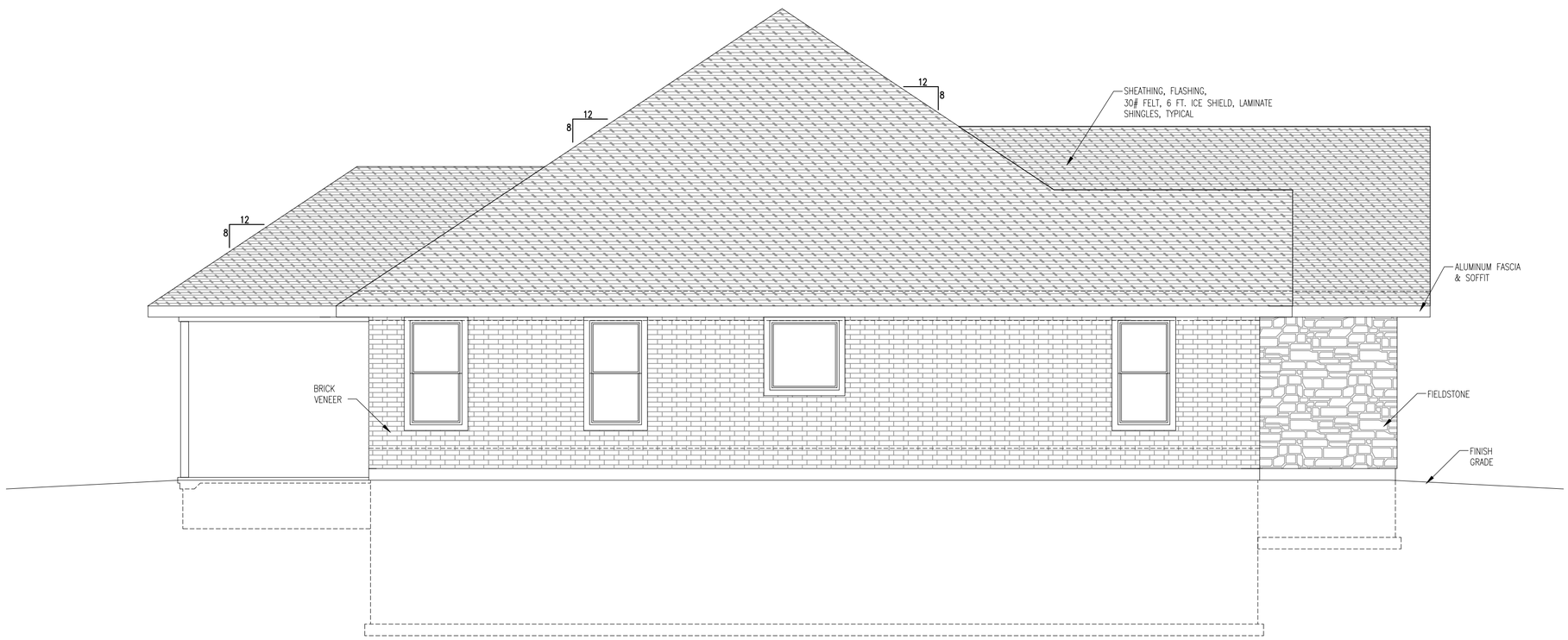

1 LEFT ELEVATION
Scale: 3/16" = 1'-0"

CONSULTANTS

TECH CAD SERVICES, LLC
Building Designer
CAD Drafting Services
Factory Built Consulting

SKILLMAN
CONSTRUCTION
NEW STRAWN, KS

OWNER
MENARD
RESIDENCE

MARK	DATE	DESCRIPTION

PROJECT NO:	2014.007
DATE:	AUGUST 28, 2014
DRAWN BY:	KHG
CHK'D BY:	KHG
COPYRIGHT:	

SHEET TITLE

ELEVATIONS

A-302

SHEET 6 OF 14

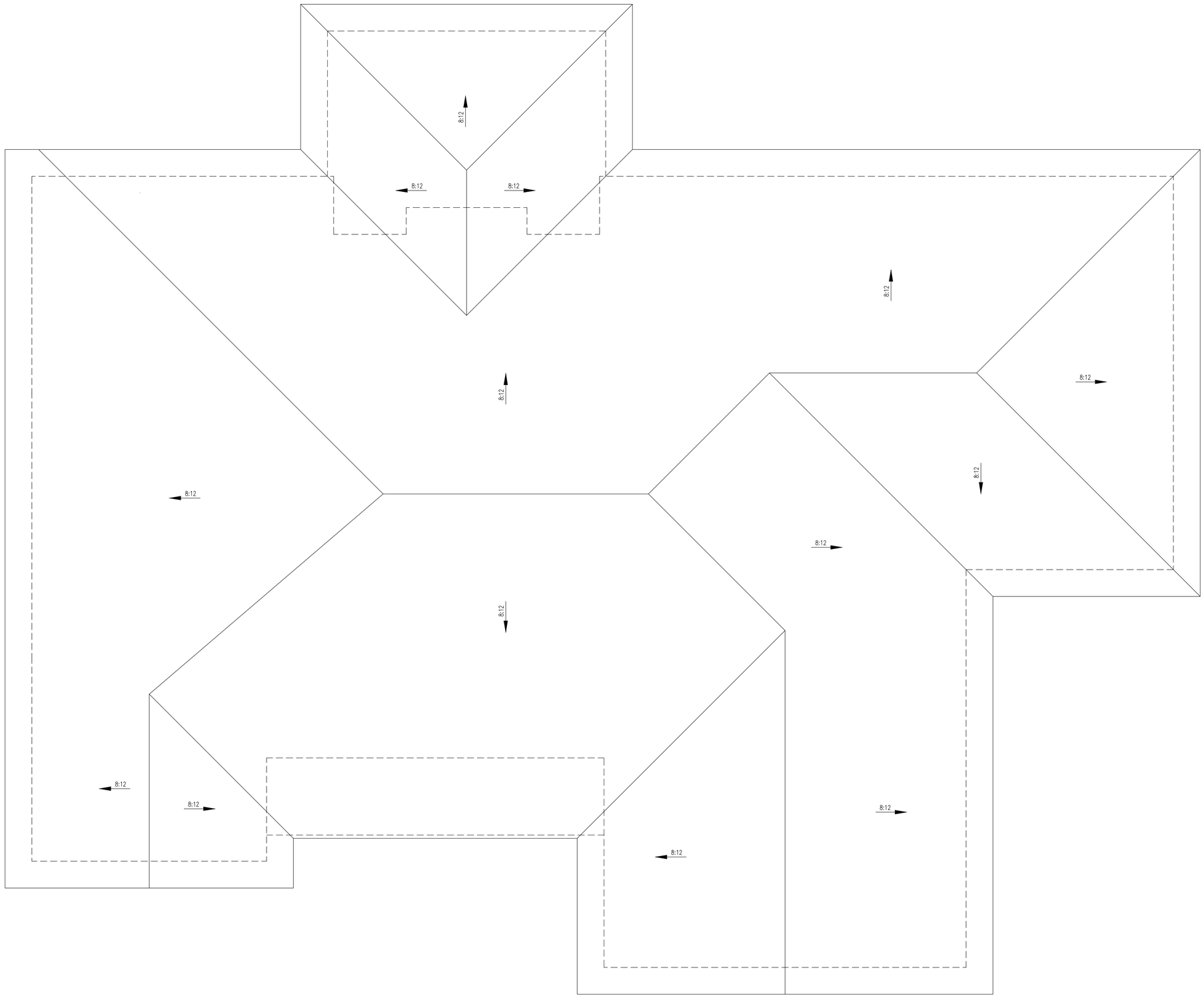

1 ROOF PLAN
Scale: 3/16" = 1'-0"

CONSULTANTS

TECH CAD SERVICES, LLC
Building Designer
CAD Drafting Services
Energy Audit Consulting

SKILLMAN
CONSTRUCTION
NEW STRAWN, KS

OWNER
MENARD
RESIDENCE

MARK	DATE	DESCRIPTION

PROJECT NO: 2014.007
DATE: AUGUST 28, 2014
DRAWN BY: KHG
CHK'D BY: KHG
COPYRIGHT:

SHEET TITLE

ROOF PLAN

A-401

SHEET 7 OF 14

Door Schedule			
Label	Quantity	Size	Remarks
1	3	3'-0" x 6'-8"	--
2	1	3'-0" x 6'-8"	20 Minute Listed
3	1	1'-6" x 6'-8"	--
4	2	2'-4" x 6'-8"	--
5	3	2'-4" x 6'-8"	Pocket
6	2	2'-6" x 6'-8"	--
7	5	2'-8" x 6'-8"	--
8	8	2'-10" x 6'-8"	--
9	1	2'-10" x 6'-8"	Pocket
10	1	4'-0" x 6'-8"	--
11	1	6'-0" x 7'-0"	--
12	1	3'-6" x 6'-8"	Sliding Barn Door w/ Cased Opening
13	2	10'-0" x 8'-0"	Over Head Door

Window Schedule					
Label	Quantity	Style	Unit Size	Egress	Remarks
A	7	Single Hung	3'-0" x 6'-0"	Yes	--
B	1	Single Hung	6'-0" x 6'-0"	Yes	(2) 3'-0" x 6'-0"
C	1	Single Hung	9'-0" x 6'-0"	Yes	(3) 3'-0" x 6'-0"
D	3	Single Hung	3'-0" x 4'-4"	No	--
E	1	Picture	3'-6" x 5'-11"	No	Safety Glazing
F	4	Single Hung	3'-0" x 6'-2$\frac{19}{32}$"	Yes	(2) 3'-0" x 4'-6" W/ Arched Transom Above
G	5	Single Hung	3'-0" x 5'-0"	Yes	--

NOTE: ALL WINDOW SIZES ARE NOMINAL. ACTUAL SIZES
SHALL BE PER CHOSEN MANUFACTURER'S SPECIFICATIONS.

CONSULTANTS

TECH CAD SERVICES, LLC
Building Designer
CAD Drafting Services
Energy Audit Consulting

SKILLMAN
CONSTRUCTION
NEW STRAWN, KS

OWNER
MENARD
RESIDENCE

MARK	DATE	DESCRIPTION

PROJECT NO: 2014.007
DATE: AUGUST 28, 2014
DRAWN BY: SMS
CHK'D BY: KHG
COPYRIGHT:

SHEET TITLE

SCHEDULES

A-501

SHEET 8 OF 14

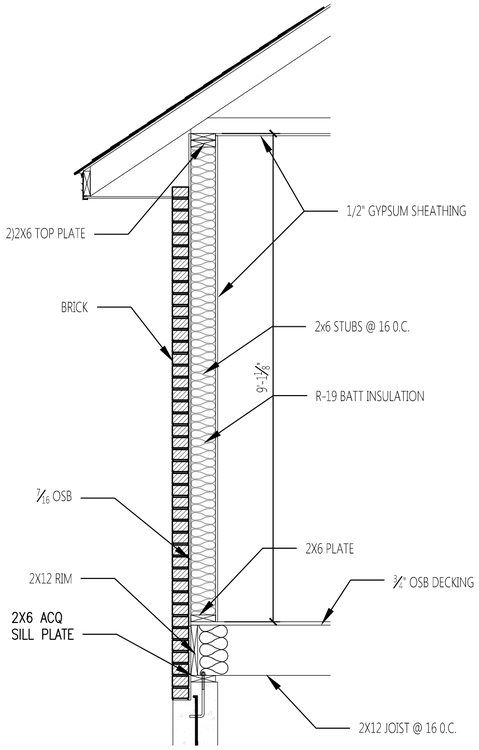

1 WALL SECTION
Scale: 1/2" = 1'-0"

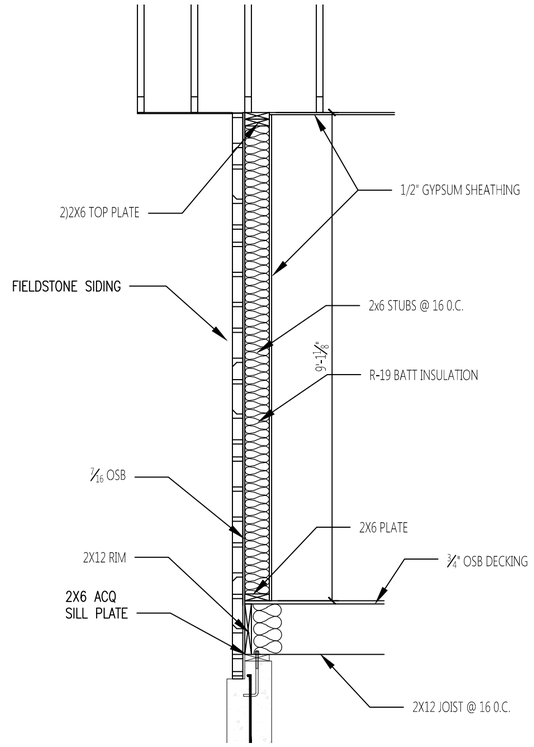

2 WALL SECTION
1/2" = 1'-0"

3 WALL SECTION
1/2" = 1'-0"

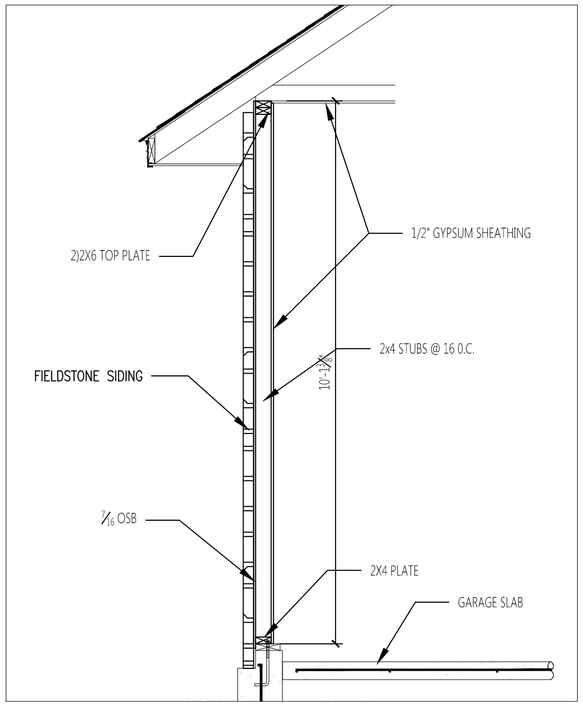

4 WALL SECTION
1/2" = 1'-0"

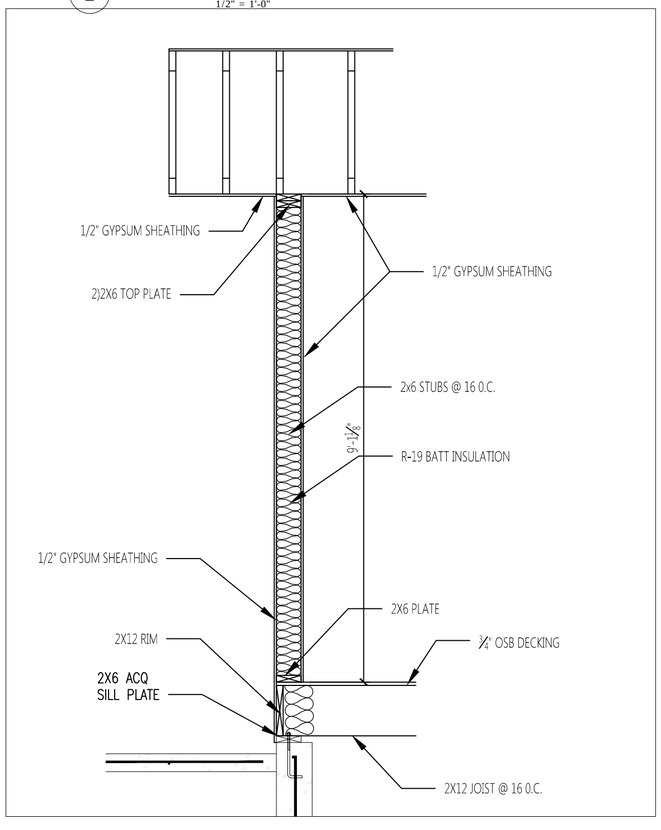

5 WALL SECTION
1/2" = 1'-0"

6 WALL SECTION
1/2" = 1'-0"

CONSULTANTS

TECH CAD SERVICES, LLC
Building Designer
CAD Drafting Services
Energy Audit Consulting

SKILLMAN
CONSTRUCTION
NEW STRAWN, KS

OWNER
MENARD
RESIDENCE

MARK	DATE	DESCRIPTION

PROJECT NO:	2014.007
DATE:	AUGUST 28, 2014
DRAWN BY:	JWA
CHK'D BY:	KHG
COPYRIGHT:	

SHEET TITLE

WALL DETAILS

A-601

SHEET 9 OF 14

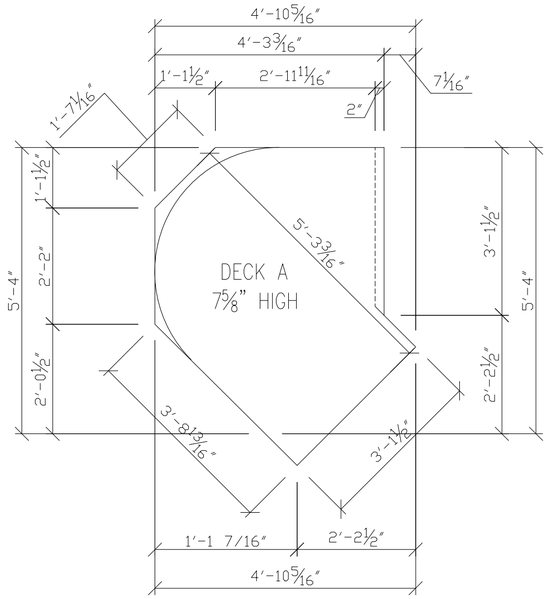

C DECK DETAIL
Scale: 1/2" = 1'-0"

D FLOOR FRAMING
Scale: 1/2" = 1'-0"

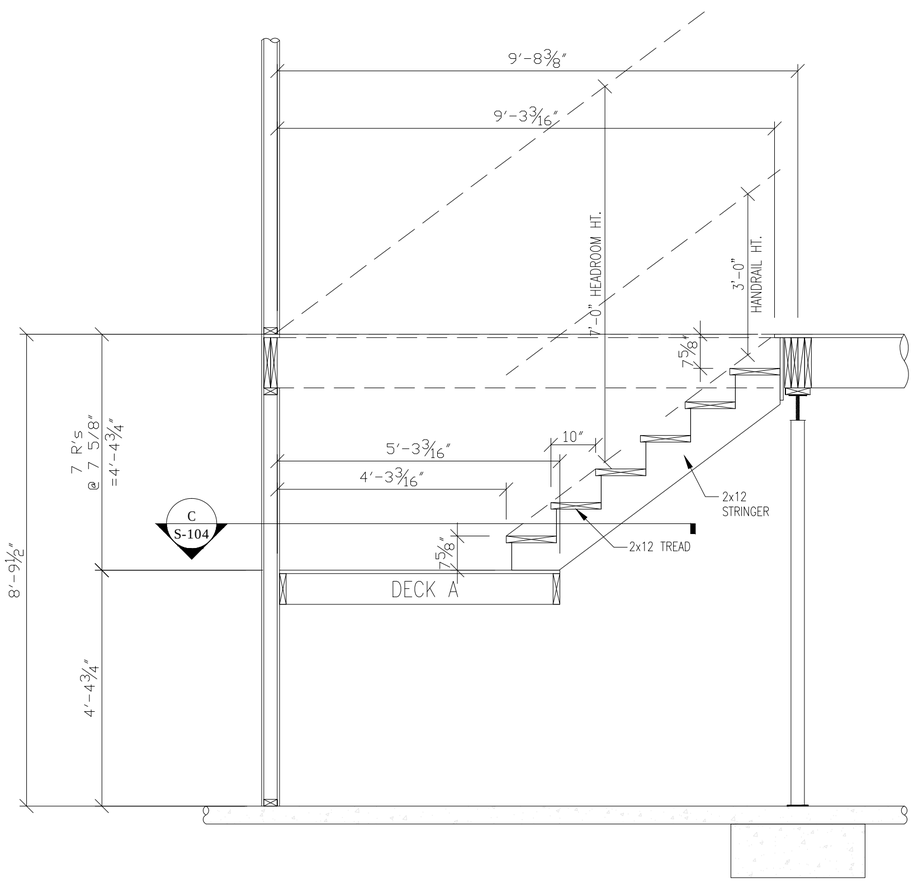

A STAIR DETAIL
Scale: 1/2" = 1'-0"

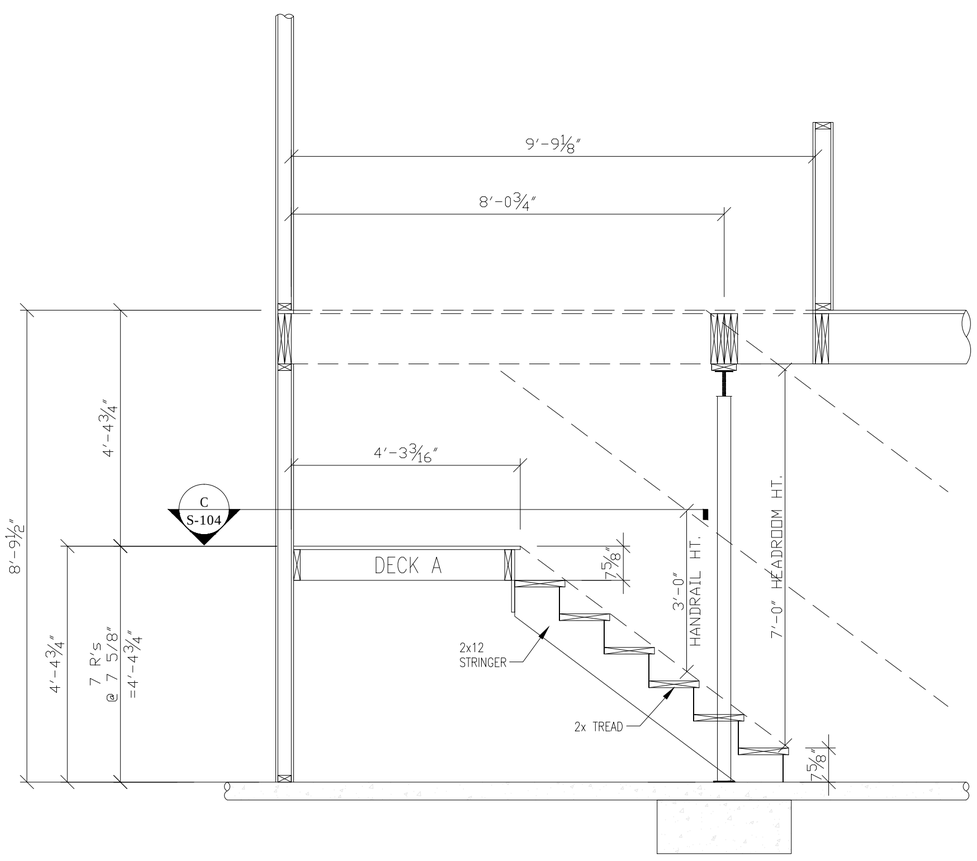

B STAIR DETAIL
Scale: 1/2" = 1'-0"

CONSULTANTS

TECH CAD SERVICES, LLC
Building Designer
CAD Drafting Services
Factory Built Housing

SKILLMAN CONSTRUCTION
NEW STRAWN, KS

OWNER
MENARD RESIDENCE

MARK	DATE	DESCRIPTION

PROJECT NO:	2014.007
DATE:	AUGUST 28, 2014
DRAWN BY:	SMS
CHK'D BY:	KHG
COPYRIGHT:	

SHEET TITLE

STAIR DETAILS

A-701

SHEET 10 OF 14

ELECTRICAL NOTES:

GENERAL

1. ELECTRICAL SHALL BE DESIGNED AND INSTALLED PER THE 2005 NATIONAL ELECTRICAL CODE (NEC).

SERVICE ENTRANCE EQUIPMENT

1. LOAD CENTER: 1 PHASE (ϕ), 3 WIRE, 120/240V 10,000A INSULATED / BONDABLE NEUTRAL
2. MAIN BREAKER : 225 AMP
3. SERVICE FEEDER SHALL PROVIDED BY SITE CONTRACTOR PER NEC TABLE 310.16
4. EQUIPMENT GROUNDING SHALL BE PER NEC ARTICLE 250 BY SITE CONTRACTOR
5. TESTING PROCEEDURER PER NEC ARTICLE 550.17.

BRANCH CIRCUITS

1. OVERCURRENT PROTECTION; 120/240 V OR 240 V AC, PER PANEL SCHEDULE
2. WIRING METHOD:
   - NM CABLE W/ GROUND PER NEC ARTICLE 550.15
   - CONDUCTOR TYPE: COPPER
3. WIRE SIZE
   - 12-2 GENERAL LIGHTING AND RECEPTACLES
   - 12-3 THREE (3) WAY SWITCHES
   - 10-2 WATER HEATER
   - HEATING, COOLING, AND SPECIALIZED EQUIPMENT SHALL BE PER MANUFACTURERS SPECIFICATIONS
4. RECESSED LIGHT FIXTURES SHALL BE MARKED IC RATED
5. ELECTRICAL BOXES SHALL BE SIZED PER NEC ARTICLE 314.16

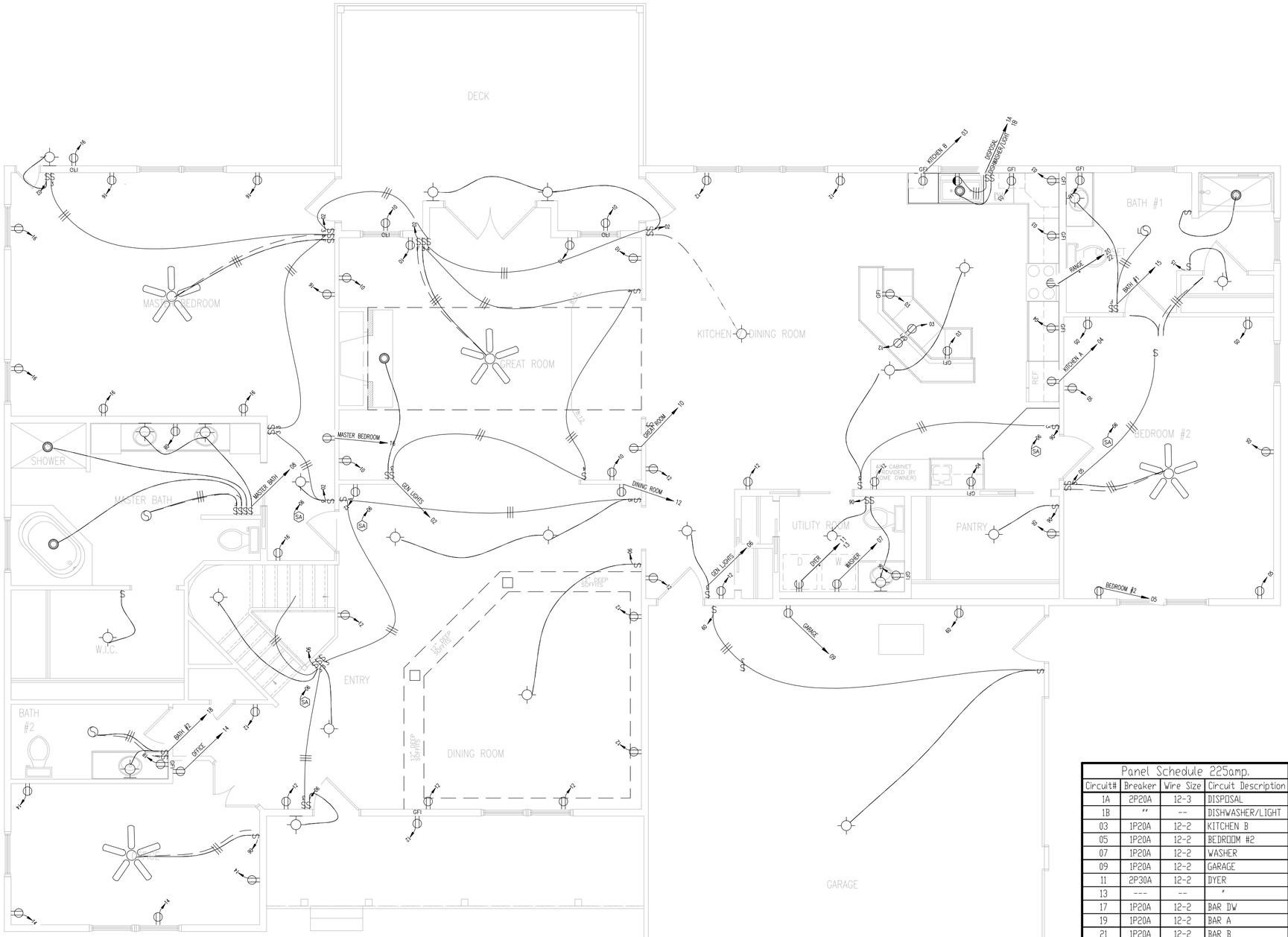

Panel Schedule 225amp.				Panel Schedule 225amp.			
Circuit#	Breaker	Wire Size	Circuit Description	Circuit#	Breaker	Wire Size	Circuit Description
1A	2P20A	12-3	DISPOSAL	06	1P20A	12-2	GEN L,IGHTS
1B	"	--	DISHWASHER/LIGHT	08	1P20A	12-2	MASTER BATH
03	1P20A	12-2	KITCHEN B	10	1P20A	12-2	GREAT ROOM
05	1P20A	12-2	BEDROOM #2	12	1P20A	12-2	DINING ROOM
07	1P20A	12-2	WASHER	14	1P20A	12-2	OFFICE
09	1P20A	12-2	GARAGE	15	1P20A	12-2	BATH #1
11	2P30A	12-2	DYER	16	1P20A	12-2	MASTER BEDROOM
13	---	--	'	18	1P20A	12-2	BATH #2
17	1P20A	12-2	BAR DW	20	2P50A	6-3/WG	RANGE
19	1P20A	12-2	BAR A	22	--	--	'
21	1P20A	12-2	BAR B	24	1P20A	12-2	PLAY ROOM
23	1P20A	12-2	BAR ROOM	26	1P20A	12-2	VAULT
25	1P20A	12-2	BEDROOM #3	28	1P20A	12-2	GAME ROOM
27	1P20A	12-2	BEDROOM #4	30	1P20A	12-2	DISPOSAL BAR
29	1P20A	12-2	FAMILY ROOM	32	1P20A	12-2	BATH #3
31	1P20A	12-2	SUMP PUMP	34	-----	---	OPEN
33	1P20A	12-2	STORAGE	36	-----	---	OPEN
35	-----	---	OPEN	38	-----	---	OPEN
37	-----	---	OPEN	40	-----	---	OPEN
39	-----	---	OPEN	42	-----	---	OPEN
02	1P20A	12-2	GEN LIGHTS				

1 FLOOR PLAN
Scale: 3/16" = 1'-0"

CONSULTANTS

TECH CAD SERVICES, LLC
Building Designer
CAD Drafting Services
Factory Built Consulting

SKILLMAN CONSTRUCTION
NEW STRAWN, KS

OWNER
MENARD RESIDENCE

MARK	DATE	DESCRIPTION

PROJECT NO: 2014.007
DATE: AUGUST 28, 2014
DRAWN BY: JOHN ANSTAETT
CHK'D BY: __
COPYRIGHT:

SHEET TITLE

ELECTRICAL PLAN

E-101

SHEET 11 OF 14

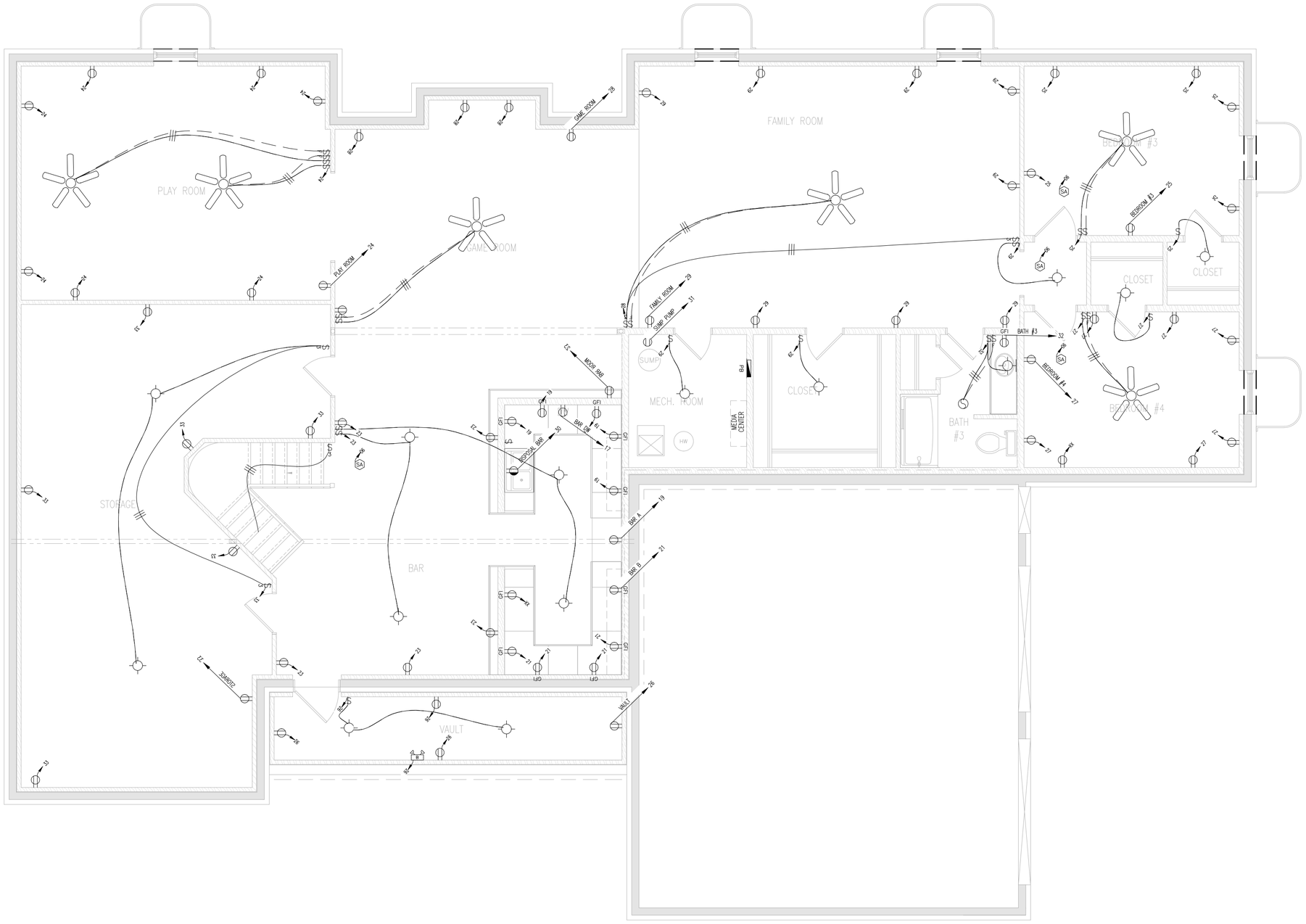

1 LOWER LEVEL PLAN

Scale: 3/16" = 1'-0"

CONSULTANTS

TECH CAD SERVICES, LLC
Building Designer
CAD Drafting Services
Energy Audit Consulting

SKILLMAN CONSTRUCTION
NEW STRAWN, KS

OWNER
MENARD RESIDENCE

MARK	DATE	DESCRIPTION

PROJECT NO:	2014.007
DATE:	AUGUST 28, 2014
DRAWN BY:	KHG/SMS
CHK'D BY:	KHG
COPYRIGHT:	

SHEET TITLE

LOWER LEVEL ELECTRICAL

E-102

SHEET 12 OF 14

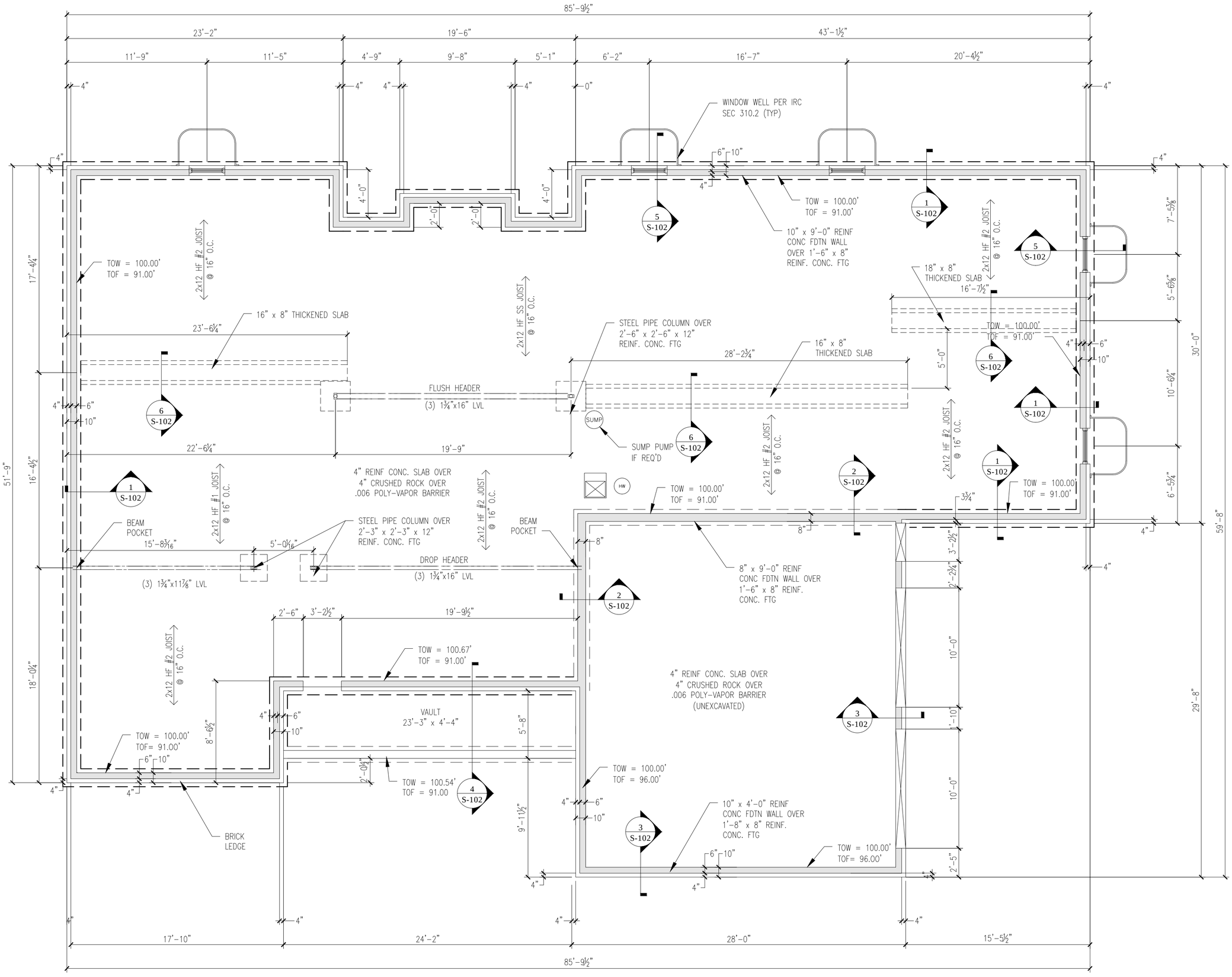

1 FOUNDATION PLAN
Scale: 3/16" = 1'-0"

CONSULTANTS

TECH CAD SERVICES, LLC
Building Designer
CAD Drafting Services
Energy Audit Consulting

SKILLMAN CONSTRUCTION
NEW STRAWN, KS

OWNER
MENARD RESIDENCE

MARK	DATE	DESCRIPTION

PROJECT NO: 2014.007
DATE: AUGUST 28, 2014
DRAWN BY: KHG
CHK'D BY: KHG
COPYRIGHT:

SHEET TITLE

FOUNDATION PLAN

S-101

SHEET 13 OF 14

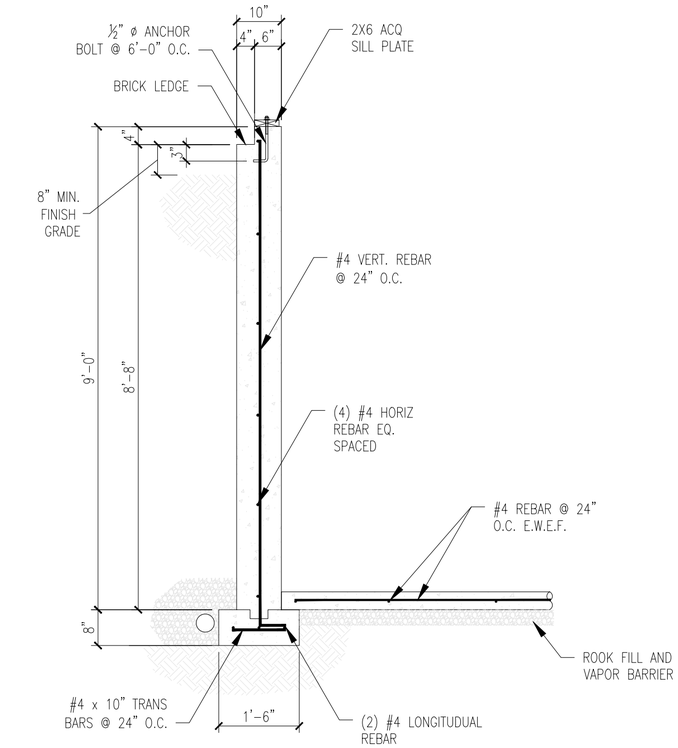

1 WALL SECTION
Scale: 1/2" = 1'-0"

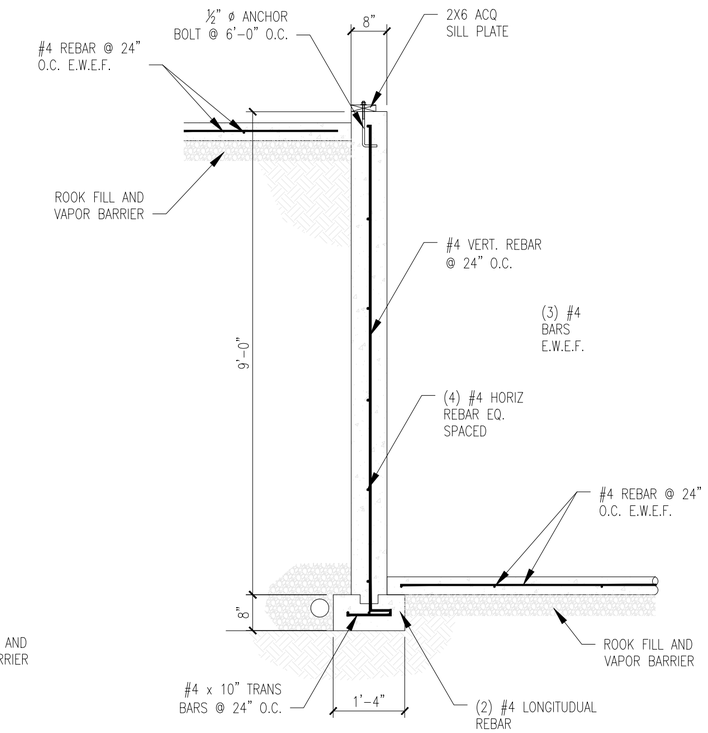

2 WALL SECTION
Scale: 1/2" = 1'-0"

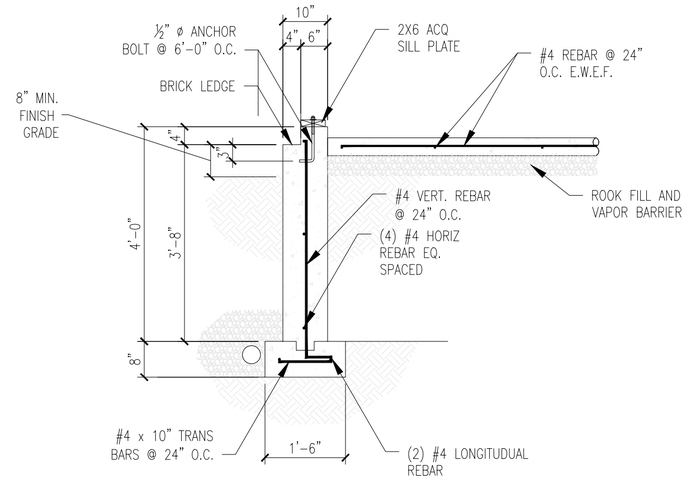

3 WALL SECTION
Scale: 1/2" = 1'-0"

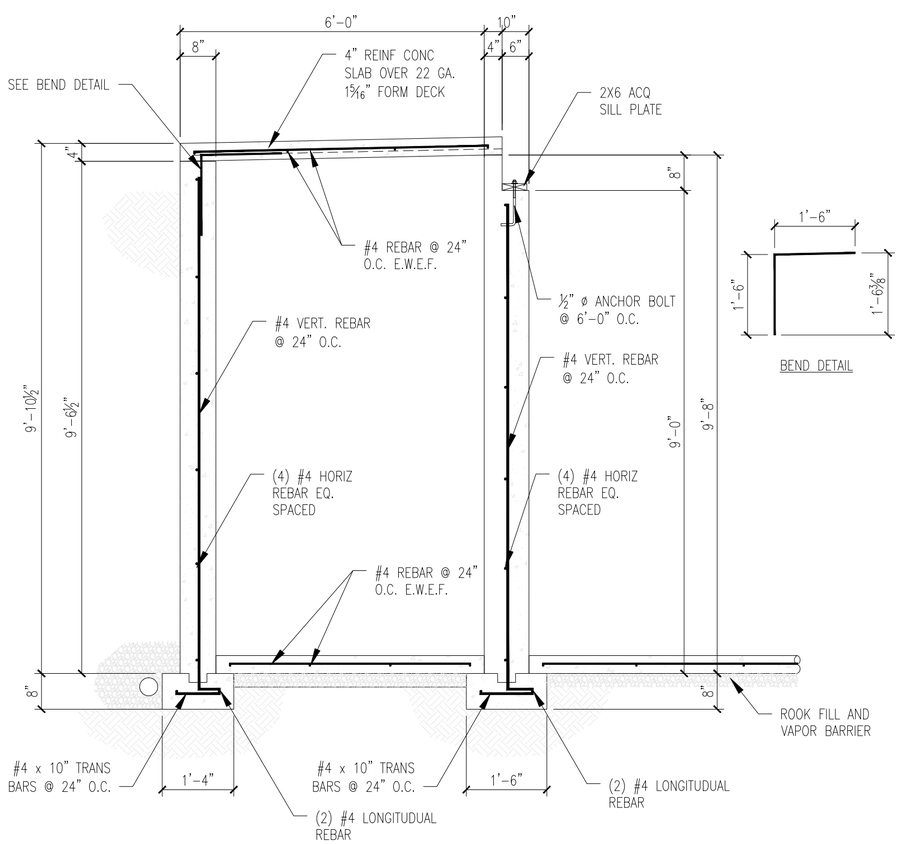

4 STORM SHELTER
Scale: 1/2" = 1'-0"

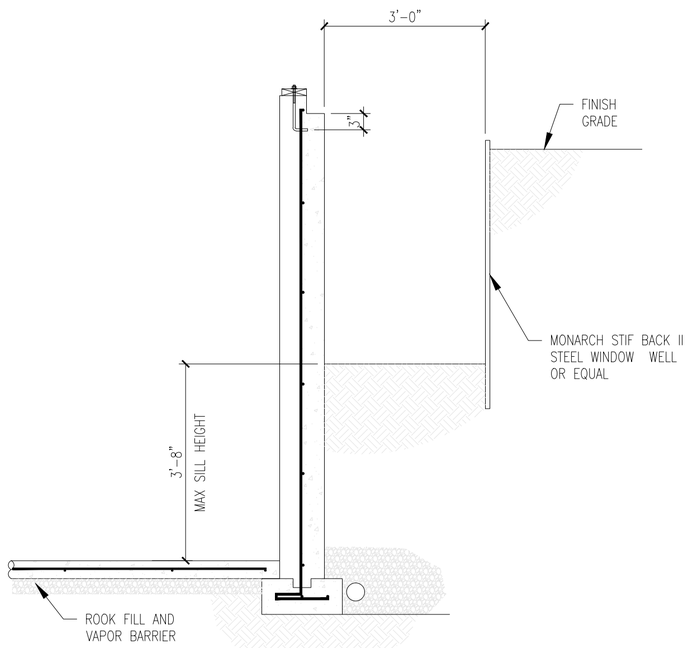

5 WINDOW WELL
Scale: 1/2" = 1'-0"

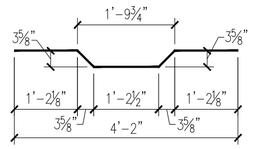

BEND DETAIL

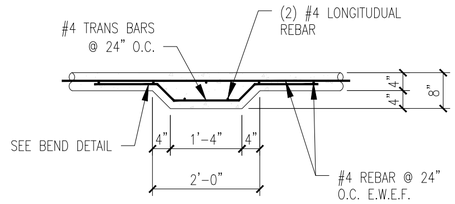

6 THICKEN SLAB
Scale: 1/2" = 1'-0"

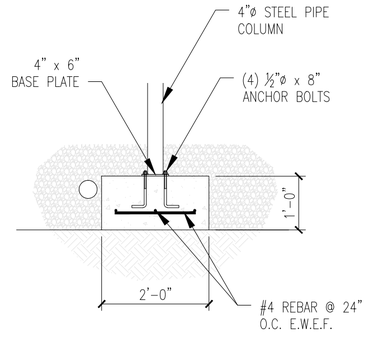

7 FOOTING
Scale: 1/2" = 1'-0"

CONSULTANTS

TECH CAD SERVICES, LLC
Building Designer
CAD Drafting Services
Factory Built Housing

SKILLMAN CONSTRUCTION
NEW STRAWN, KS

OWNER
MENARD RESIDENCE

MARK	DATE	DESCRIPTION

PROJECT NO:	2014.007
DATE:	AUGUST 28, 2014
DRAWN BY:	KHG
CHK'D BY:	KHG
COPYRIGHT:	

SHEET TITLE

FOUNDATION DETAILS

S-102

SHEET 14 OF 14